TROUBLE SHOOTING OF STUD WELDING (EQUPMENT)

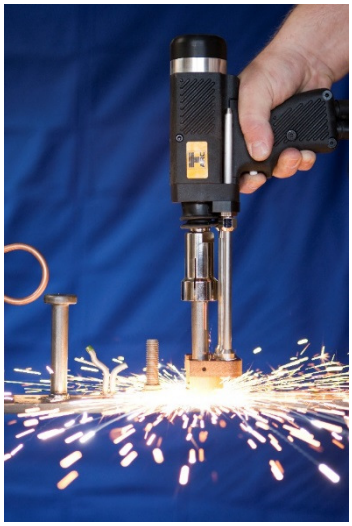

We see several time, that the two main principles of Studwelding are mixed up therefor I will start to repeat short the welding methods.

Capacitor Discharge called CD welding

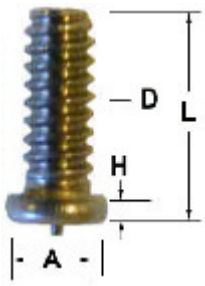

Typical run on one Phase, 110 Voltage or 220 Voltage. Here the unit charge a capacitor battery up – from 1 sec to 5 sec. depended of the unit and the voltage over the Capacitors. The voltage can be from 35 Voltage to 200 voltage. Depended of the welding diameter.

This method is typical use on thing steel plates. The surface of the steel shall be clean. The total welding time is about 0,003 second and cannot be changed. The pin will only burn few 10th of an mm into the steel. It will be difficult for this method to burn through a thick “black surface of the steel. That is why the surface need to be lean.

The welding point of the stud shall also be made according to ISO 13918. The pin/stud shall have a small pip – See photo.

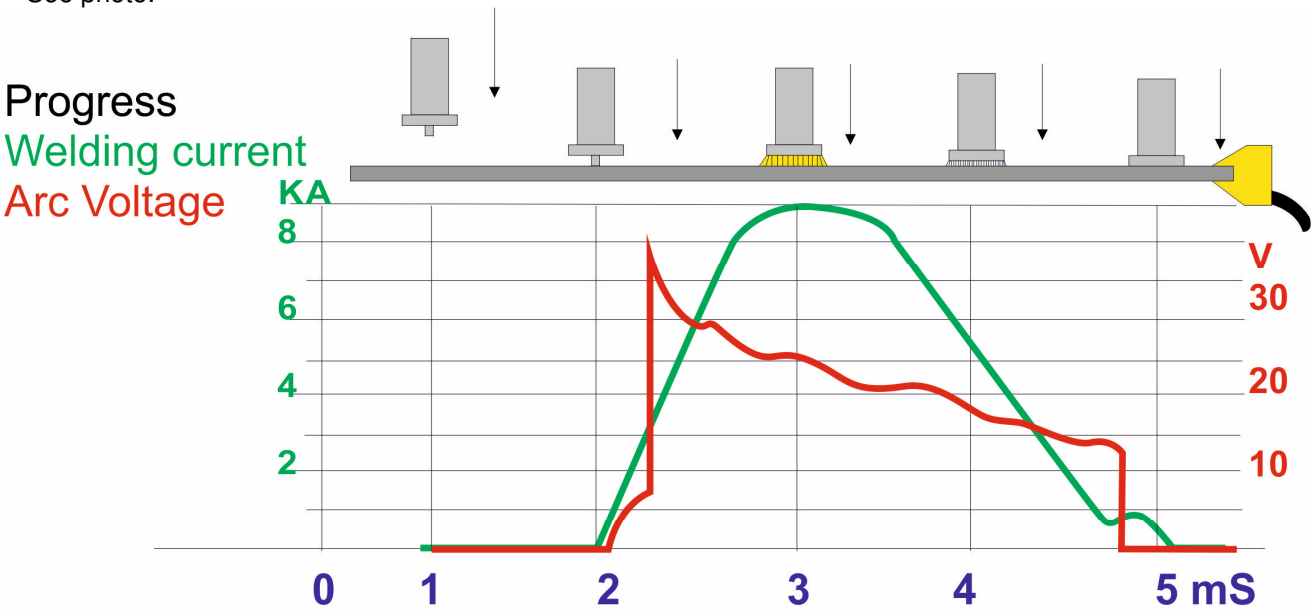

Current, Voltage and elapsed time course of welding Ø6 mm pin by studwelding after Capacitor Discharge methode, Typical called Capacitor discharge – short CD

Drawn Arc called DA welding



Typical this unit run on 3 phases 380 Voltage to 440 Voltage, consuming minimum 32 Amp up to 192 Amp by 380 V
The welding time can be adjusted. For bigger unit weldingcurrent can also be adjusted. The heat input will be higher than the CD method.
Important is the lift of the pin by drawn an arc during the welding. The pin must lift up when starting the welding like welding by electrodes. Lift will typical for studs and pins be 2 mm for diameters up to 10 mm.
IF THE PIN NOT LIFT – THERE WILL NOT BE AND ARC ANDTHERE WILL NOT BE ANY WELDING.

The heat input is much higher than CD welding, which make this method good for welding a black steel.
It can weld through most surfaces.

Normal there will be some flux in the welding point of the welding studs,
Pins / stud up to Ø3 – Ø8 mm sometime do not have any flux.
You can find more information:
ISO 13918 – Description of welding stud
ISO 14555 – Test of the welding

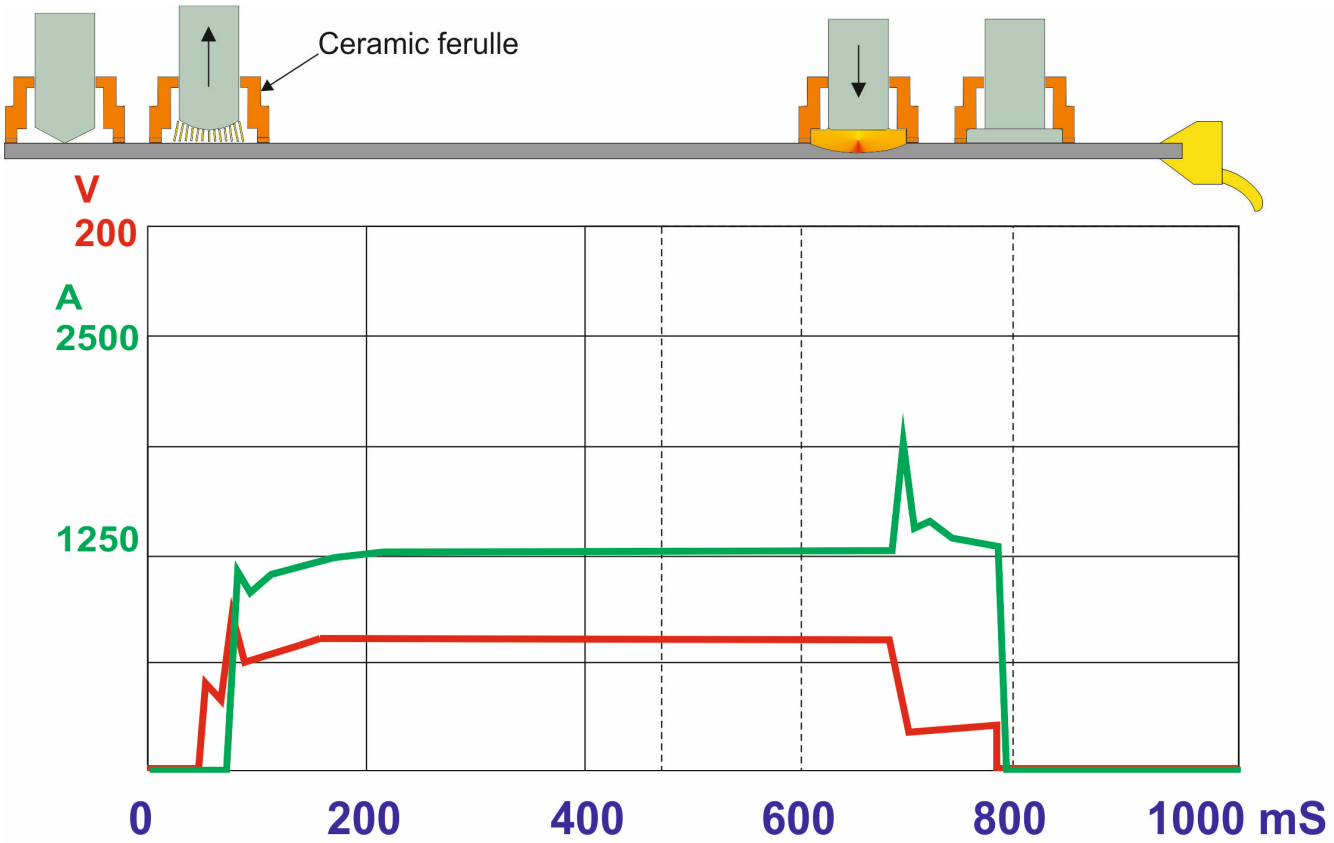

Current, Voltage and elapsed time course of welding Ø16 mm pin by studwelding after Drawn Arc methode,
Typical called Drawn Arc – short DA

Check of DT410



CHECK DT410
Follow the step. The welding gun shall be ready to work – See adjustment of welding guns next page.

1) Check the power connection – 3 Phases, 32 Amp and ground connection. We don't use zero
2) Turn on the machine without welding gun. Main switch to position 1. The green LED (No.1) light.
   If the switch drop of – Go to
3) Connect the welding gun and ground cable to a clean steel plate
4) Hold the welding gun in the free air. LED No. 6 shall- be turned on – Yellow.
5) Press the microswitch on / off (Still the welding gun is in the free air. – The green LED No.5 turn on/off
6) Put the welding gun to welding position. The yellow LED No 4, turn on.

   If Point 1 to 6 is OK, DT410 seems to be OK

   RED LED No. 3 is a stop sign. You are not allowed to weld.
   Yellow LED No. 2 is on. The equipment is too hot, and will turn off.

Check the welding gun and adjustment, See next page.
Protrusion shall be from 4 to max 6 mm. The pin or welding stud may not touch the ceramic. Movement up and down shall go smoothly in the welding position

.
Comment to point:

1) If the main switch turn of or don't stay in position 1. The failure can be:
   a) One of the 3 main Phase is broken.
   b) Missing 24 V DC inside DT410, which hold the switch
   c) One of the 4 fuses inside is broken
   d) Mainswitch defective.
   e) Main switch still not hold in position one – Try to keep the switch in position one and see which LED is working. Check point 1 to 6 again.

If still a problem to keep the main switch on – Missing 24 Volt DC at the main switch it can be:
The trouble can be all over - It can be:

1) The main PCB ; part 80-60-1013
2) Front PCB; part: 80-60-1025
3) Protection PCB; part 80-60-1067
4) "Motherboard": part number 80-60-1026
5) Power trafo: part number 80-35-1048

DABOTEK

PCB + Transformer
B-80-35-10 8 (400V)
B-80-35-1109 (415V)
B-80-35-1163 (230V/ 60V)

F1 & F2: 400V fuse
F1A F1A

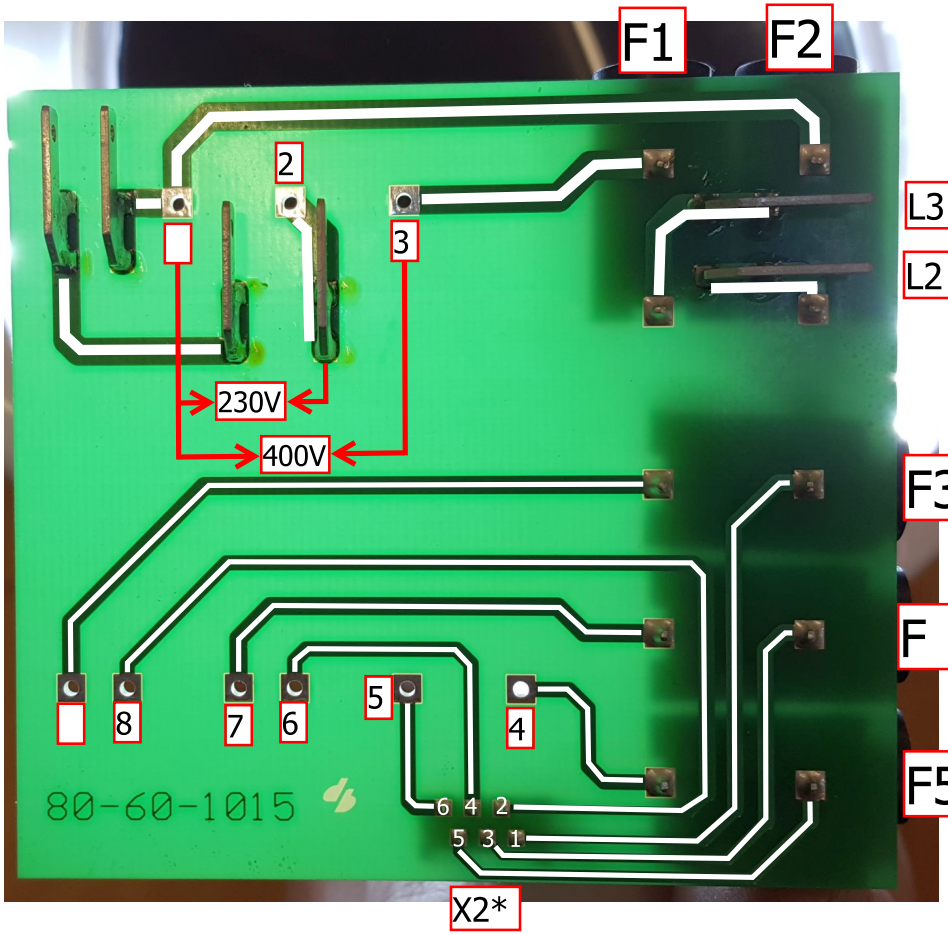

L3 <- main switch (6) 00V L3

L2 <- main switch (2) 00V L2

F3/T315mA: 9V fuse

F /F1A: 20V fuse

F5/F A: 70V fuse

X2*	Transformer
1 & 2 = 9 VAC	= 9 & 8 -> Display (!)
3 & 4 = 20 VAC	= 7 & 6 -> PCB B-80-60-1013
5 & 6 = 70 VAC	= 5 & 4 -> Gun lift magnet

(!)=Not used in LBH-410/Alpha-400

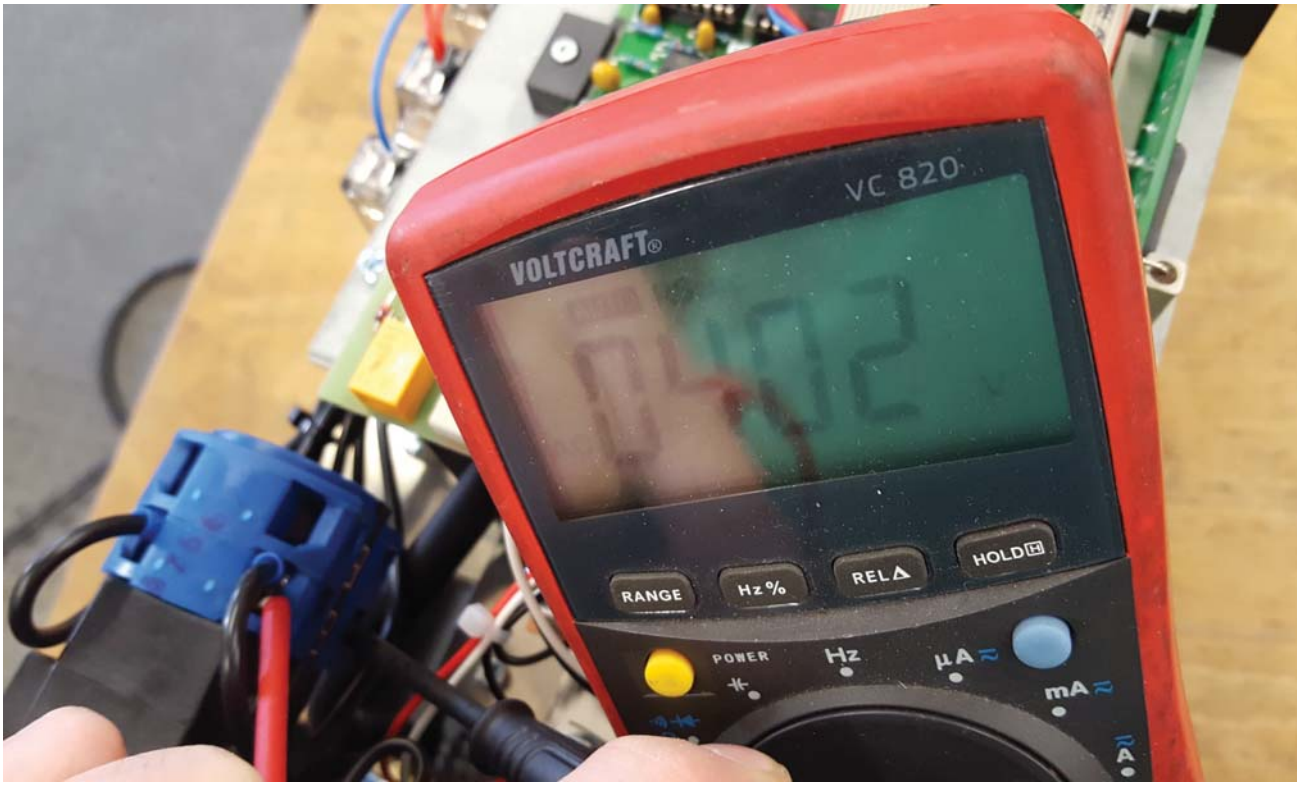
VOLTCRAFT®
VC 820
RANGE
Hz %
REL Δ
HOLD
POWER
Hz
µA ≈
mA ≈

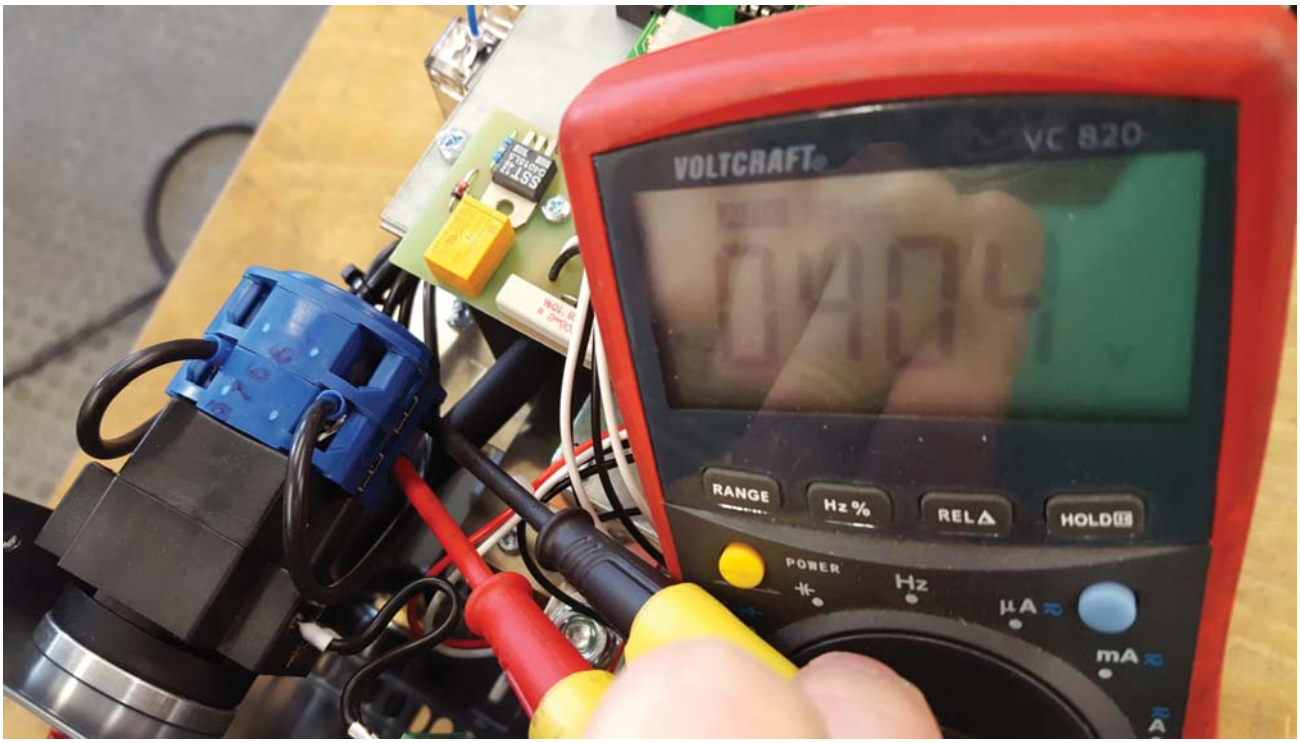
VOLTCRAFT®
VC 820
RANGE
Hz %
REL Δ
HOLD
POWER
Hz
µA ≈
mA ≈

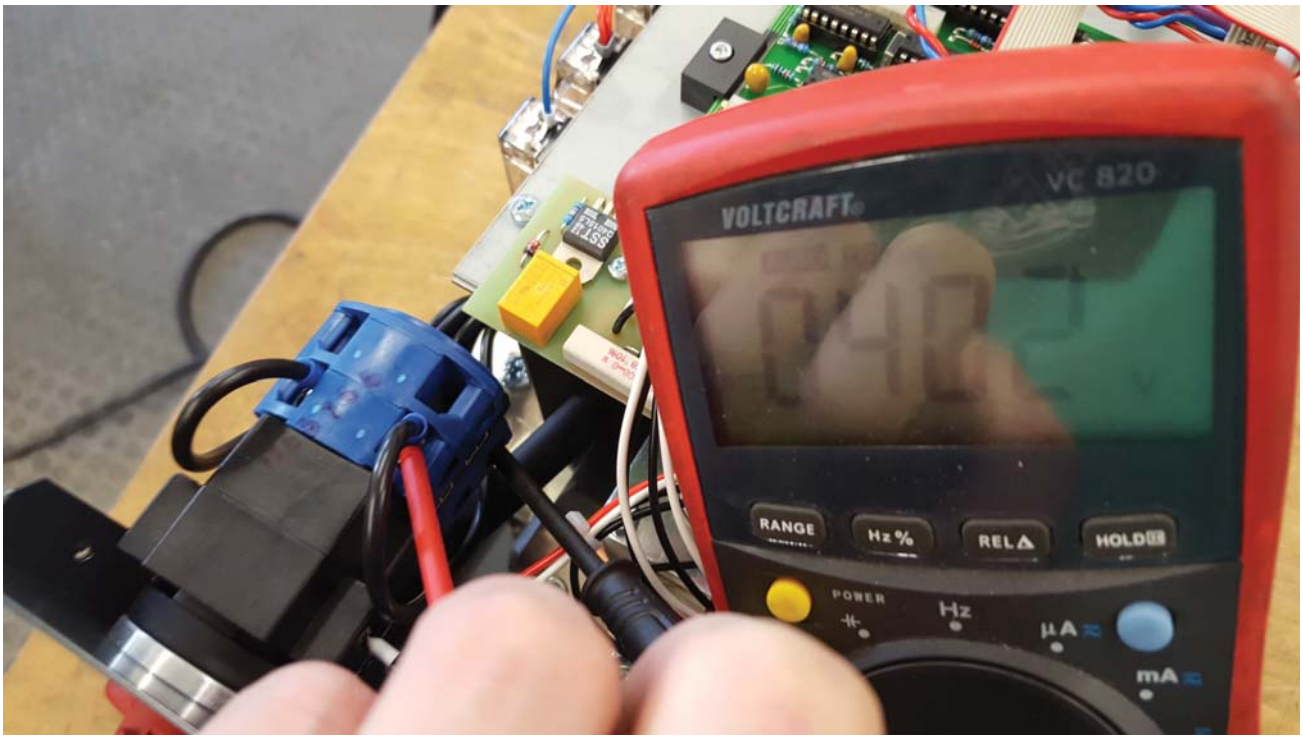
VOLTCRAFT
VC 820
RANGE
Hz %
REL Δ
HOLD
POWER
Hz
μA
mA

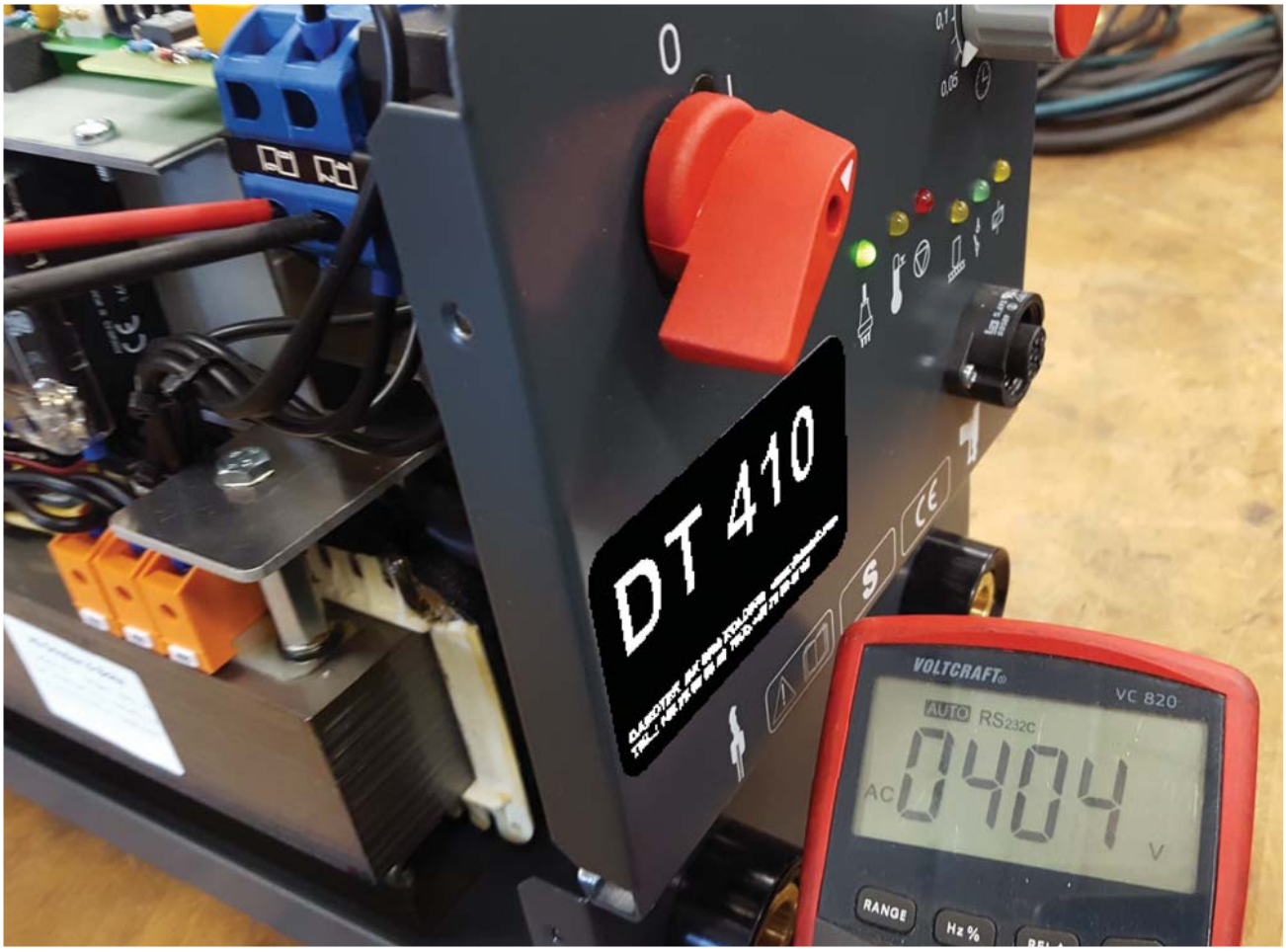
0
DT 410
VOLTCRAFT
VC 820
AUTO
RS232C
AC
0404
V
RANGE
Hz %

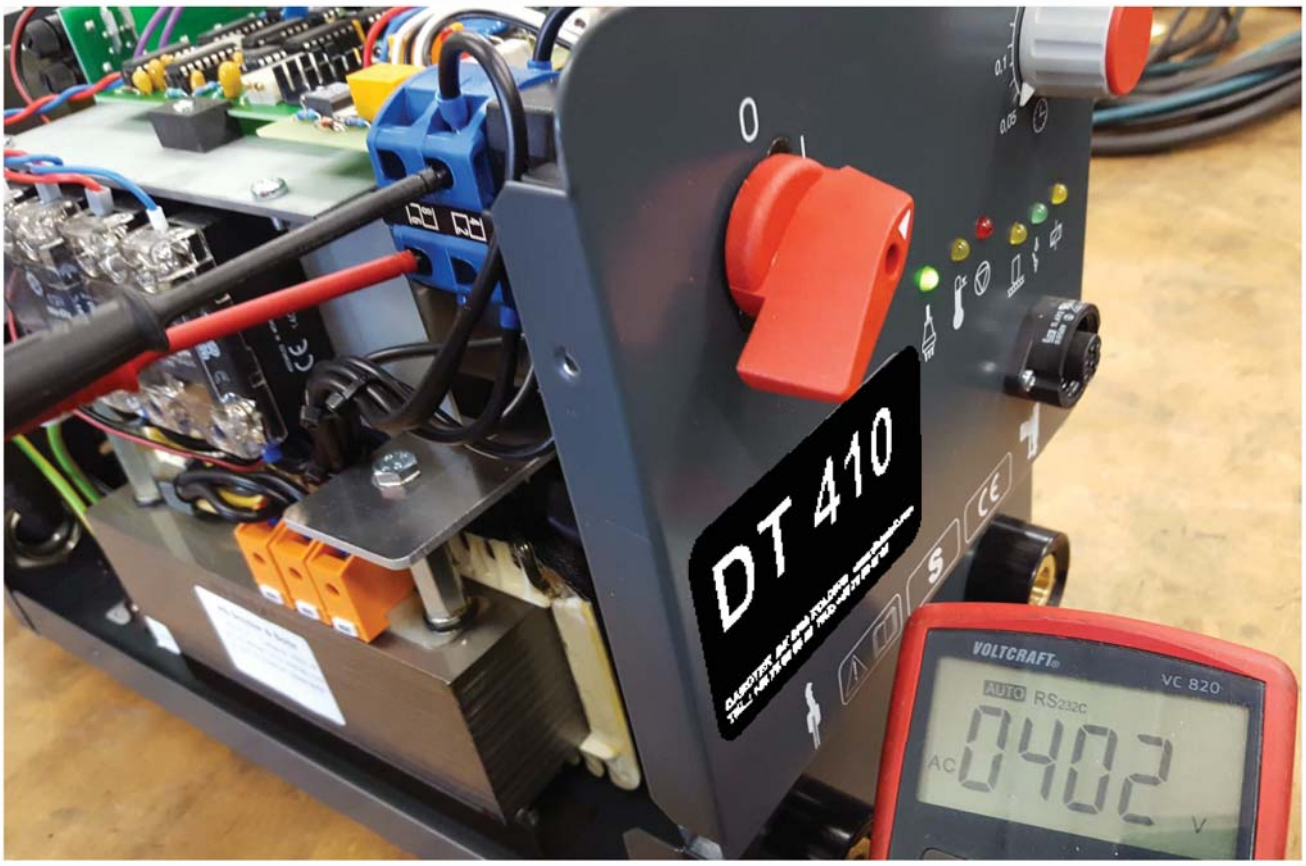
DT 410
VOLTCRAFT
VC 820
AUTO RS232C
AC 0402 V

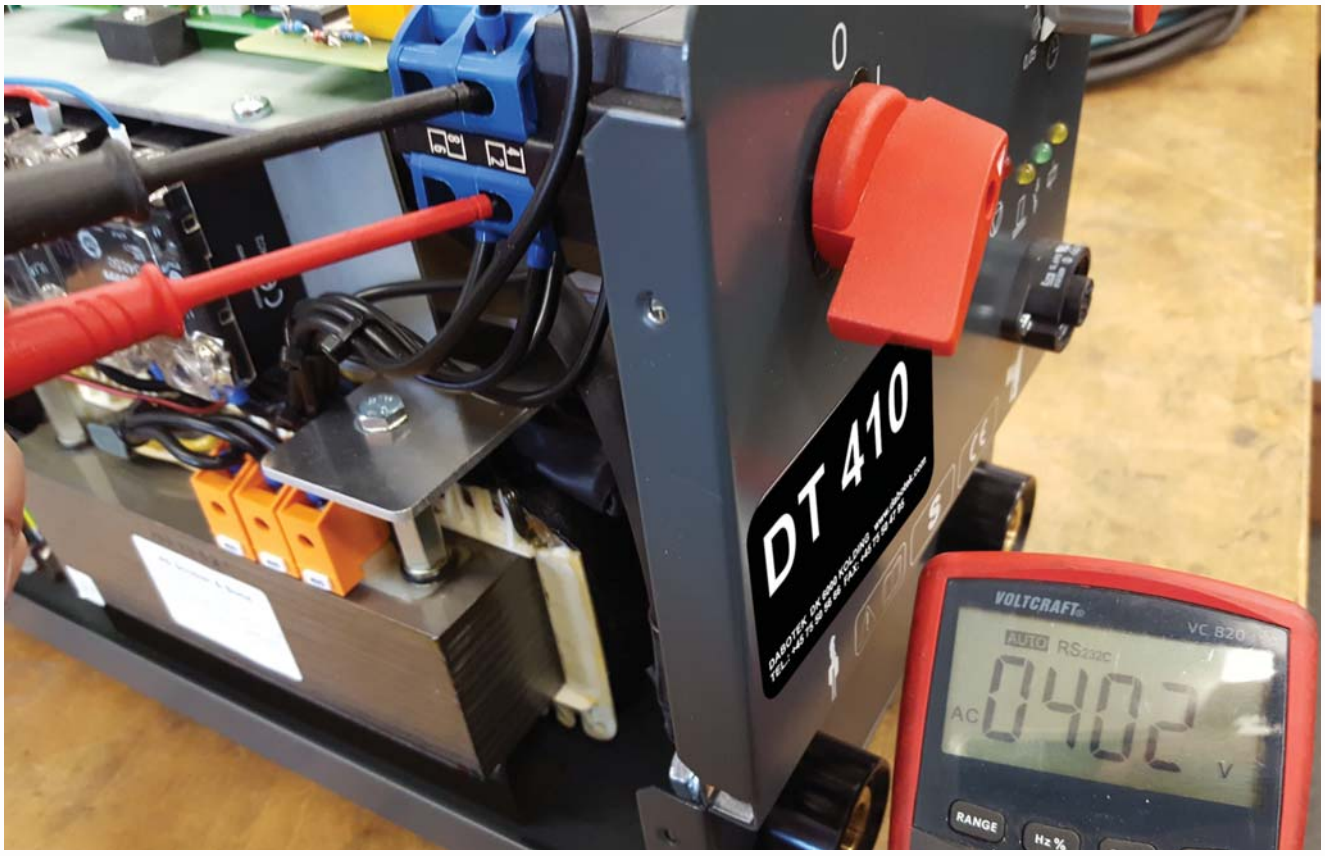
DT 410
VOLTCRAFT
VC 820
AUTO RS232C
AC 0402 V
RANGE
Hz %

TEL.: +45 75 50 56 66 FAX: +45 75 50 47 95





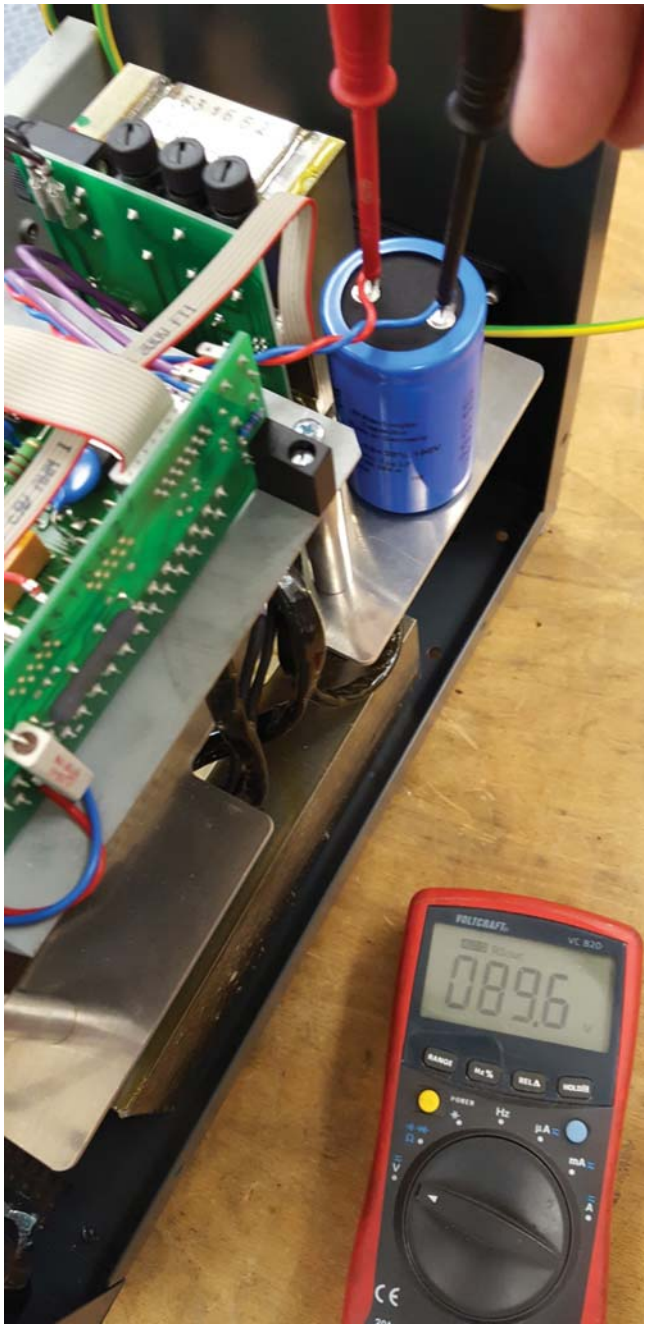
VOLTCRAFT
VC 820
089.6

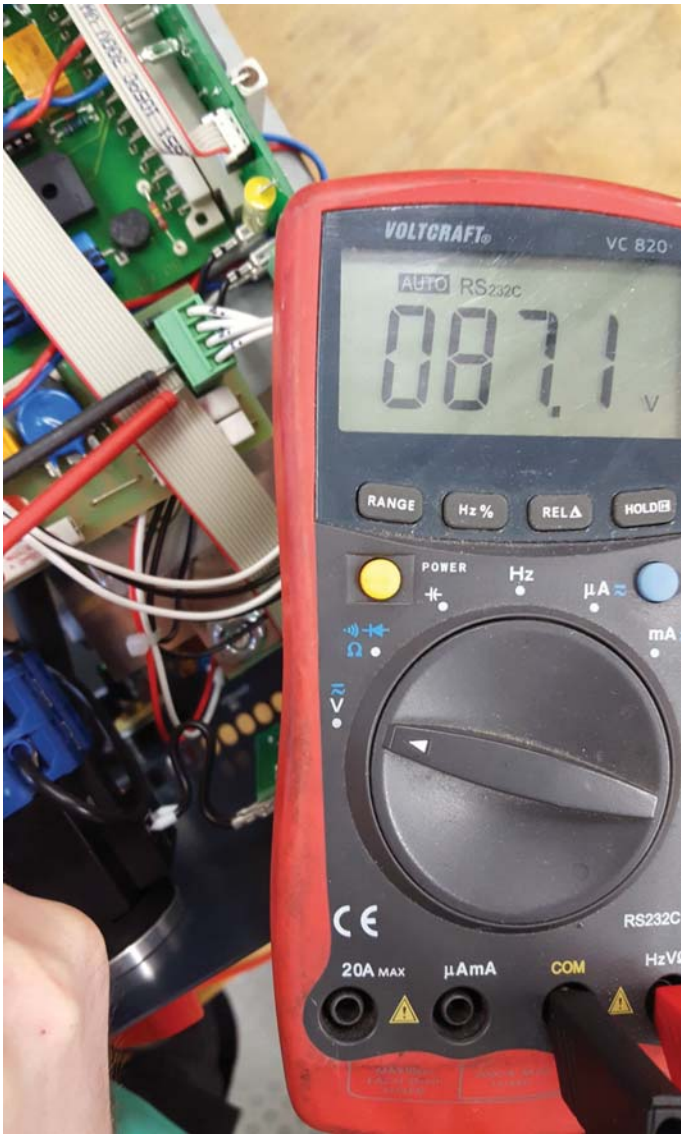
VOLTCRAFT
VC 820
AUTO RS232C
087.1
V
RANGE
Hz %
REL Δ
HOLD
POWER
Hz
µA
mA
RS232C
20A MAX
µAmA
COM

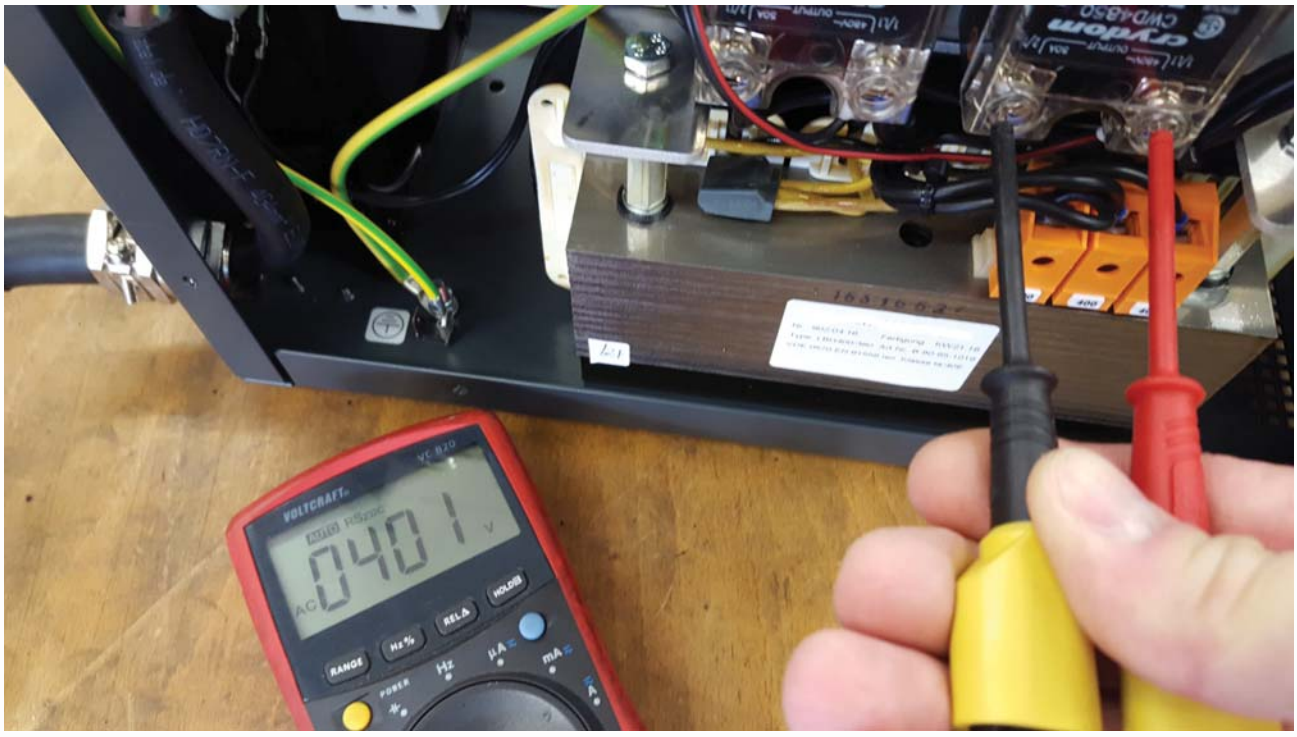
VOLTCRAFT
VC 820
AUTO
RS232C
AC
0401
V
RANGE
Hz%
REL
HOLD
POWER
Hz
µA
mA
CWD4850
cryotom

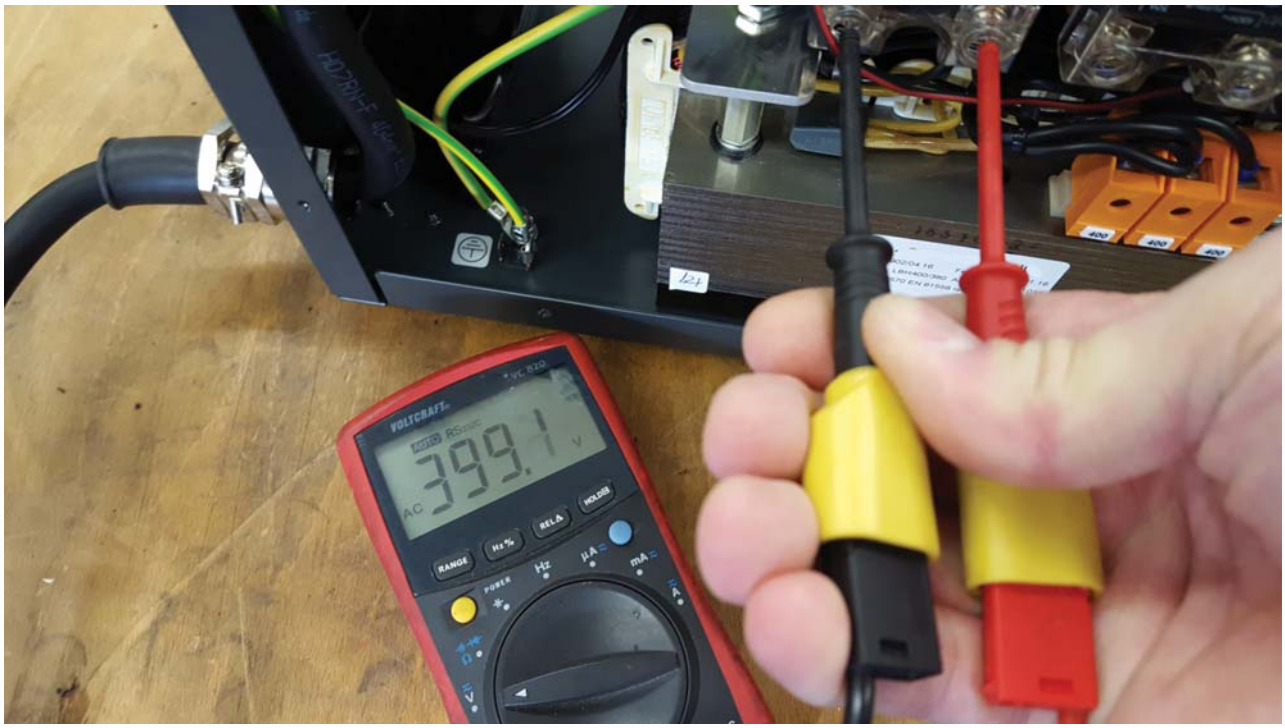
VOLTCRAFT
VC 820
AUTO
RS232C
AC
399.1
V
RANGE
Hz%
REL
HOLD
POWER
Hz
µA
mA

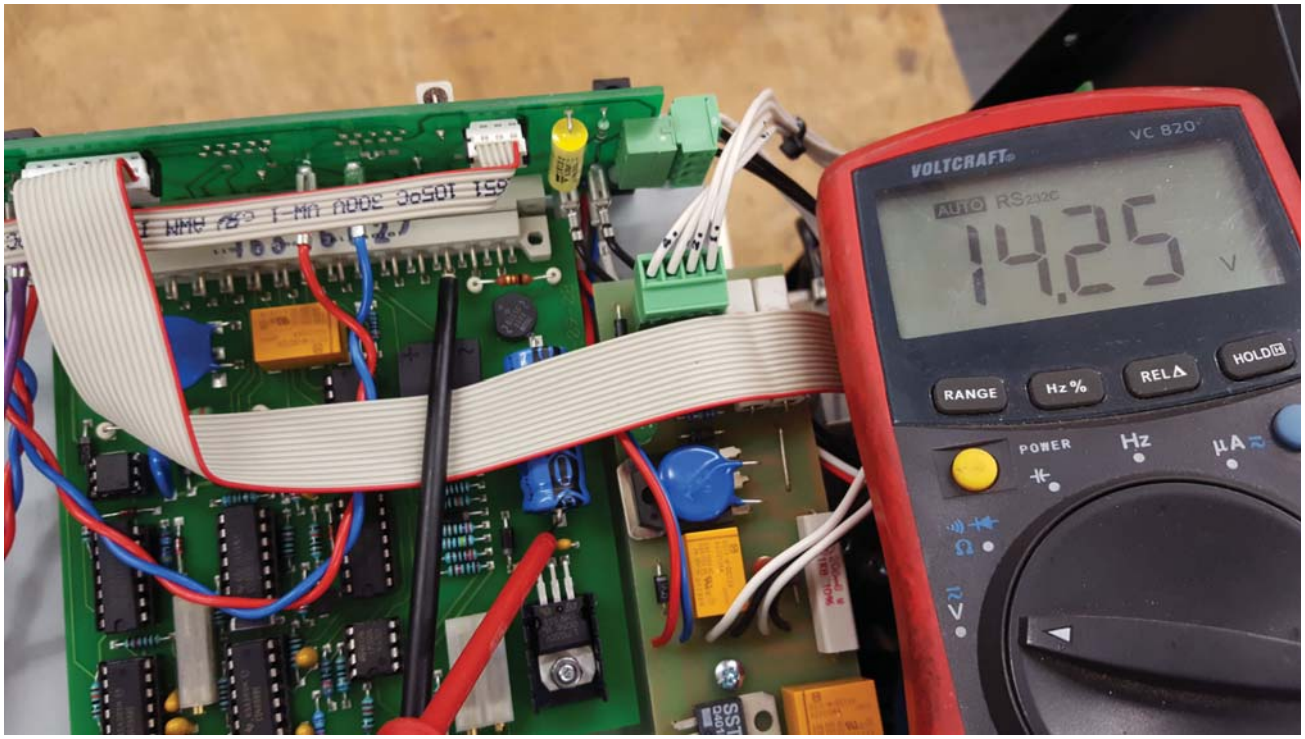
VOLTCRAFT
VC 820
AUTO RS232C
14.25 V
RANGE
Hz %
REL Δ
HOLD
POWER
Hz
µA
mA
Ω
V
A

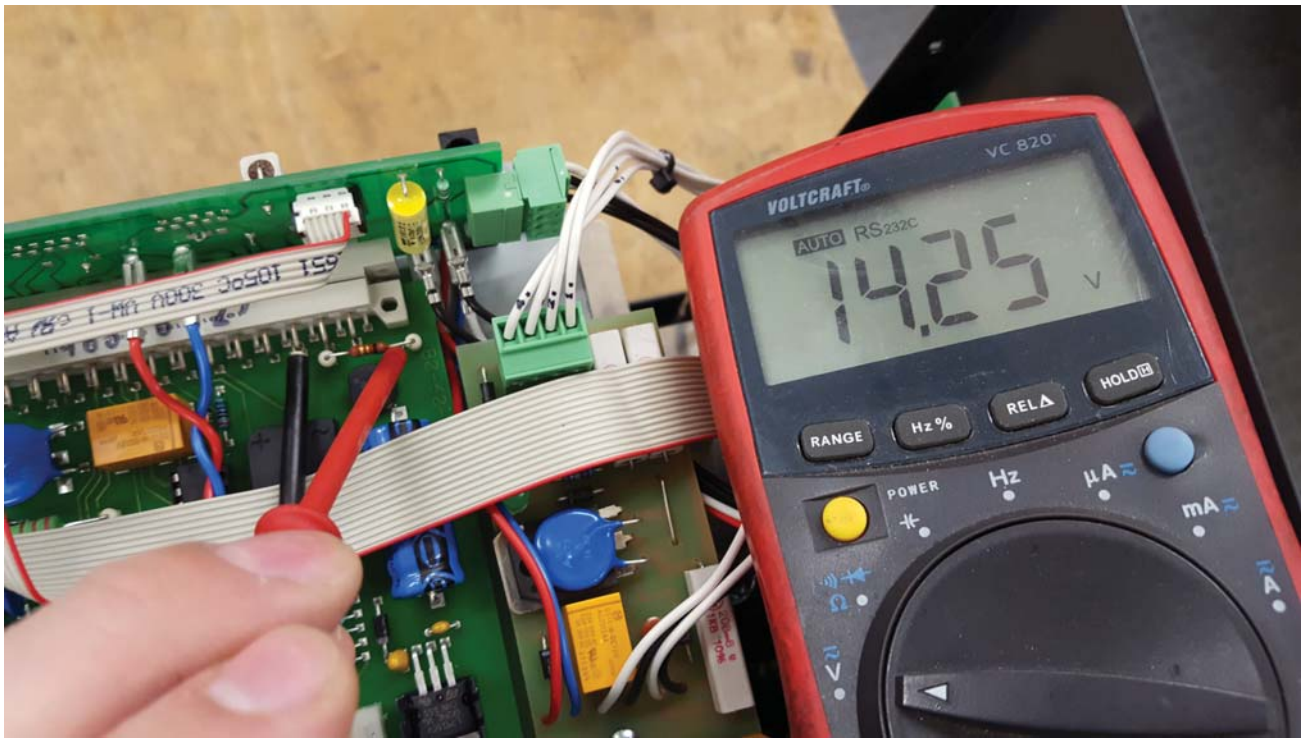
VOLTCRAFT
VC 820
AUTO RS232C
14.25 V
RANGE
Hz %
REL Δ
HOLD
POWER
Hz
µA
mA
Ω
V
A

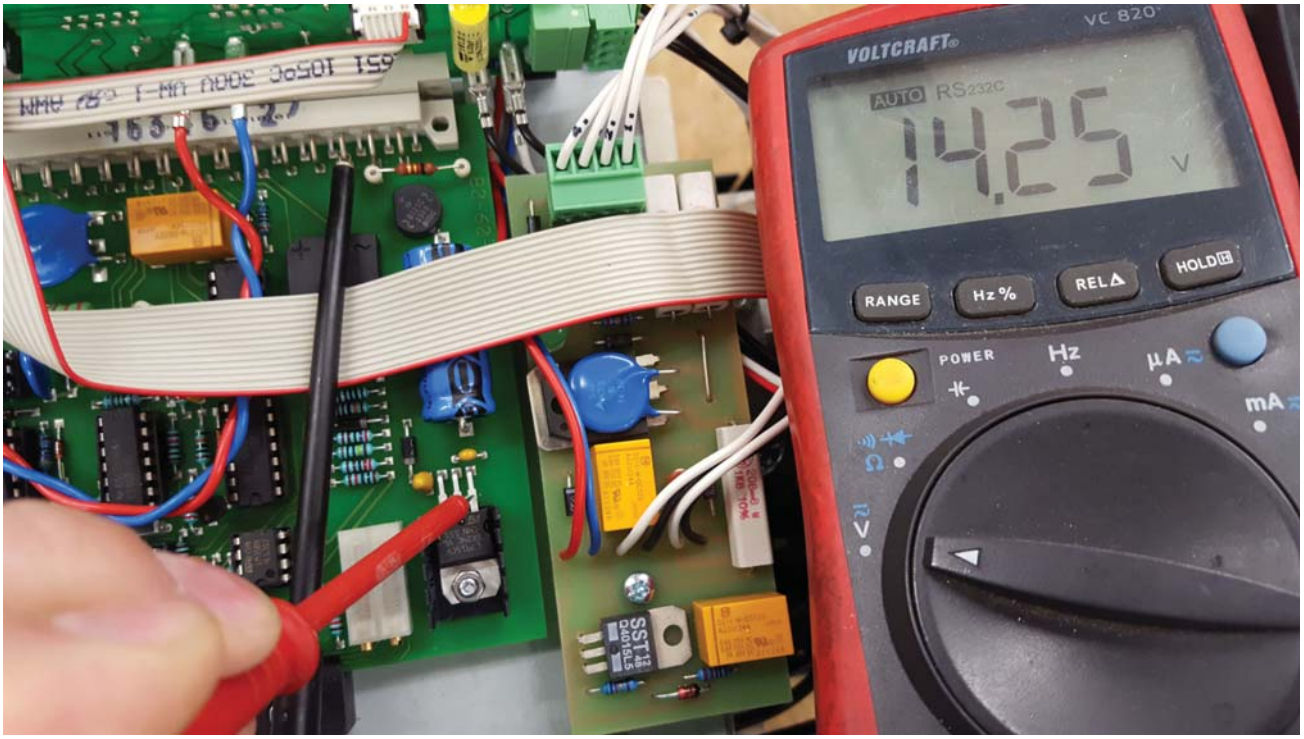
VOLTCRAFT
VC 820
AUTO RS232C
14.25 V
RANGE
Hz %
REL Δ
HOLD
POWER
Hz
µA
mA
Ω
V

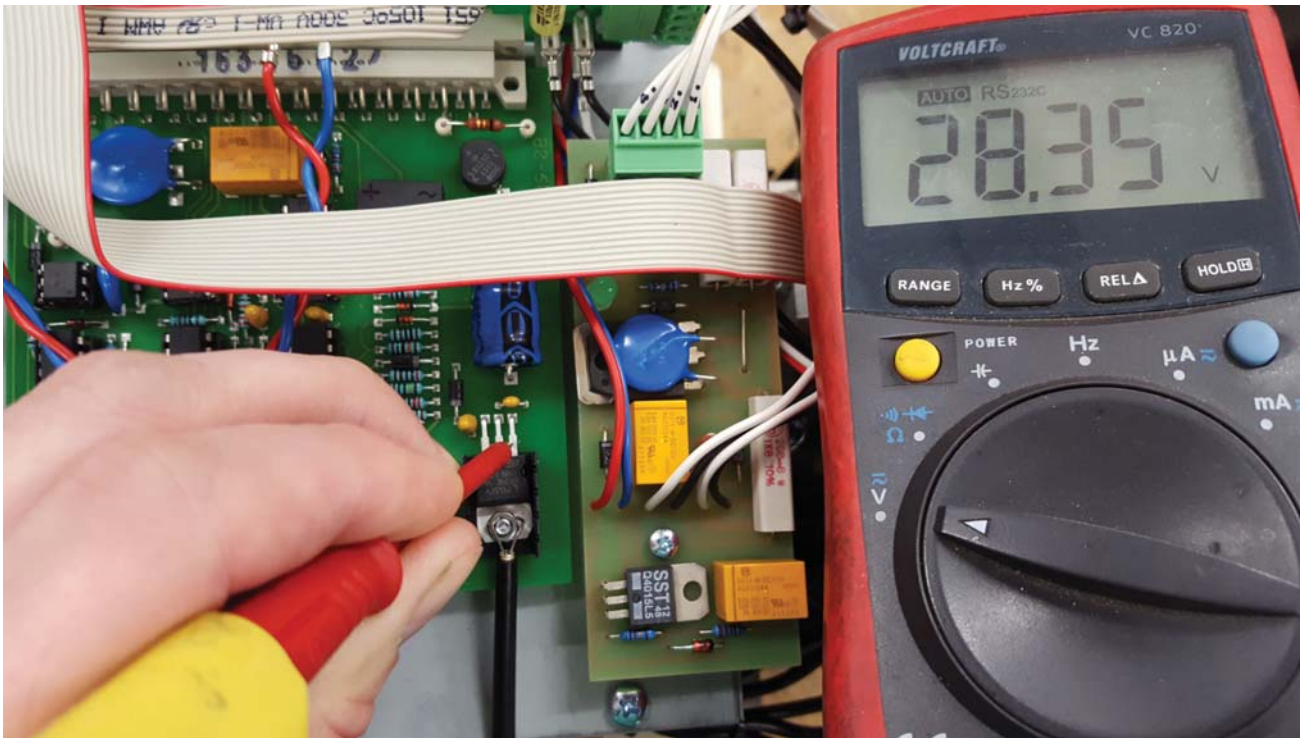
VOLTCRAFT
VC 820
AUTO RS232C
28.35 V
RANGE
Hz %
REL Δ
HOLD
POWER
Hz
µA
mA
Ω
V

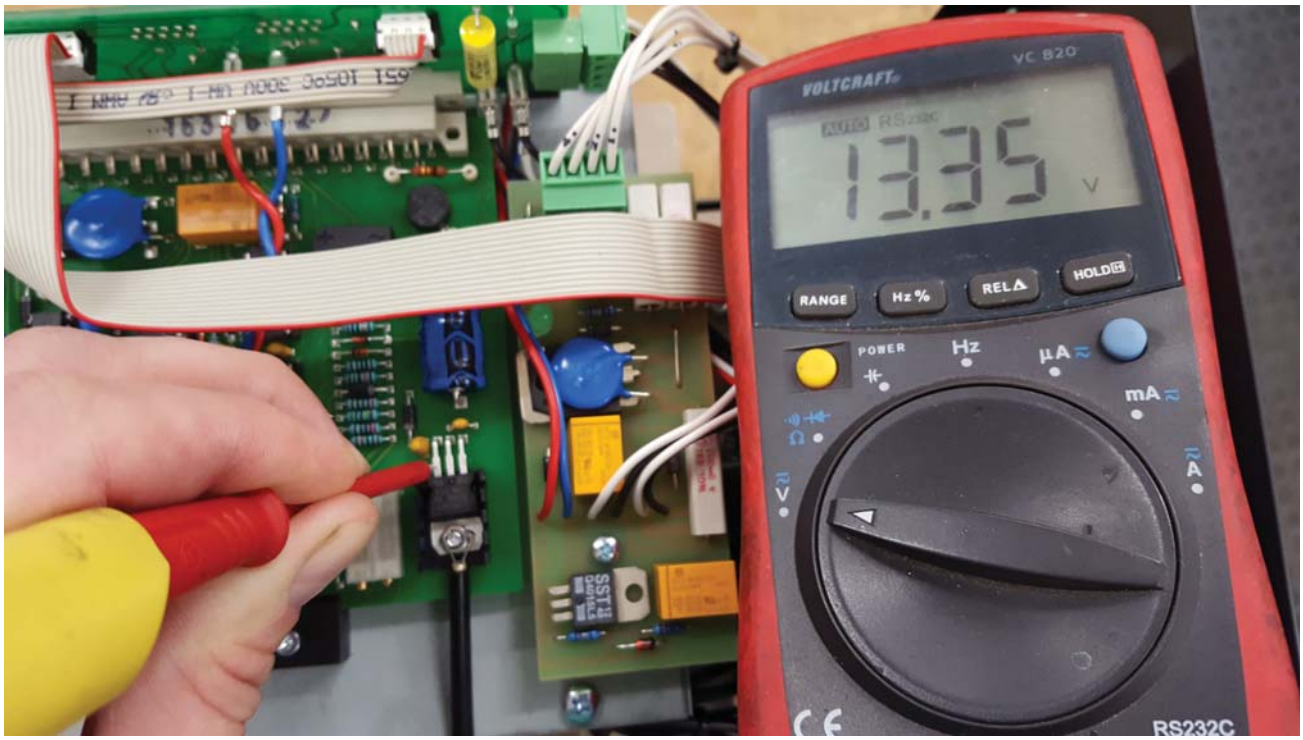

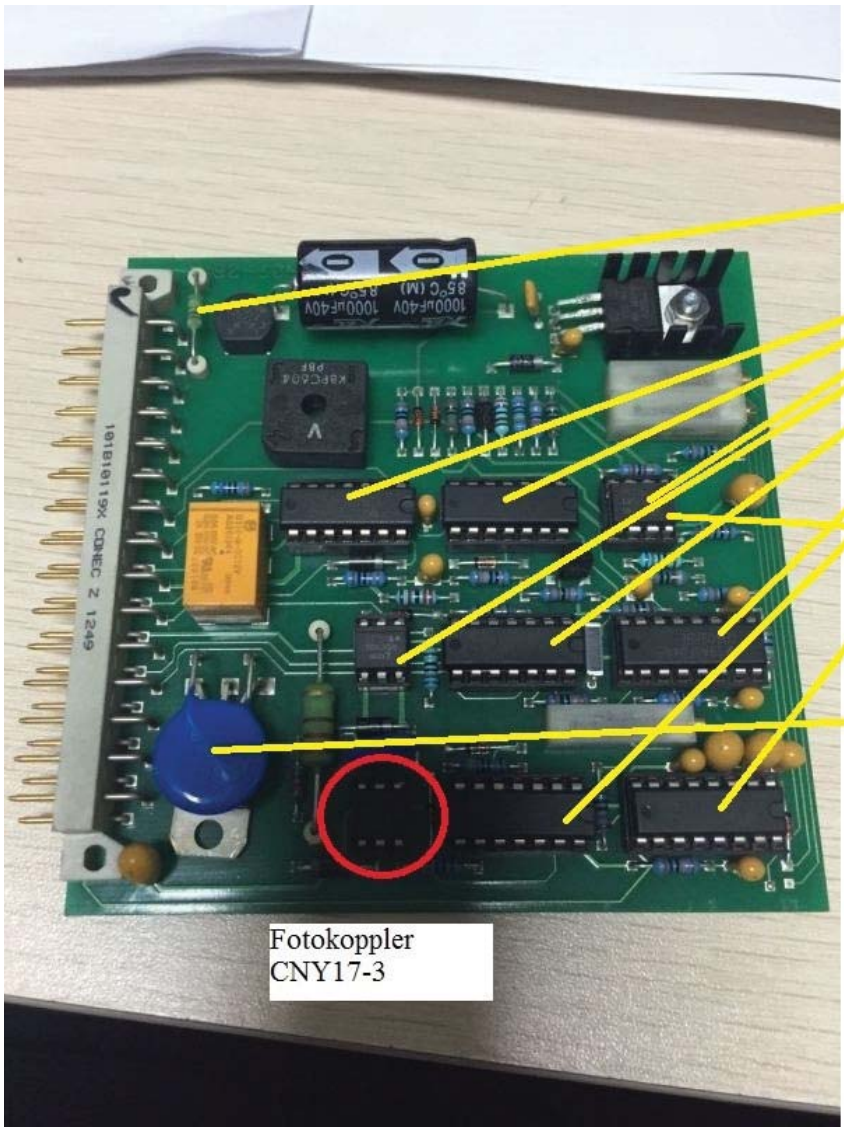

also to check 1 Ohm

also to check: all IC

If kontakt-LED
is on.

also to check

Fotokoppler
CNY17-3

Adjustment of welding gun PHM 5 & 12

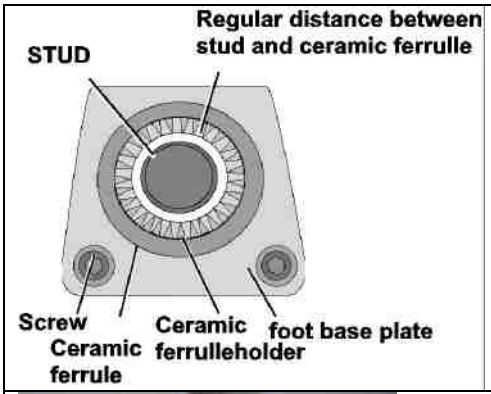

Adjustment of foot base plate so the regular distance between ceramic ferrule and stud (insulation pin) is in centre. Otherwise the stud is hindered when dipping into the melting steel.

- Slightly loosen screws connecting foot base plate and pillars
- Shift foot base plate until there is a regular distance between ceramic ferrule and stud (pin).
- Tighten screws and stud (pin)
- Also check the stud protrusion. If necessary adjust again.



Adjust your leg assembly so your stud protrusion (or insulations pin) will stand about 5 mm out your ceramic ferrule X= 4-5 mm.

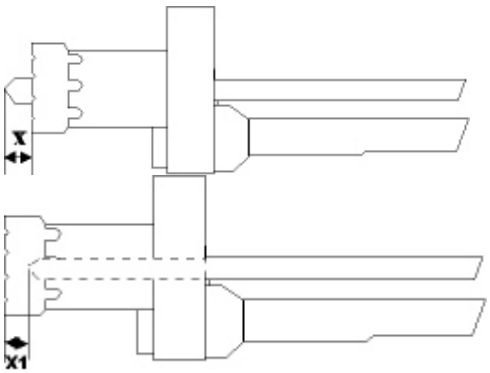



Try to lift by hand to max, and check that the stud (or insulation pin) will be lower than the edge of the ceramic ferrules X1 = 1 - 2 mm



Now try in welding position to lift again by hand, here you should lift the insulations pin 1 to 2 mm. See pic. Below.

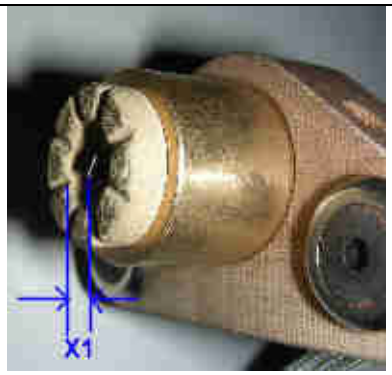

PC-board with position of fuses

Only qualified electricians are allowed to exchange the fuses.

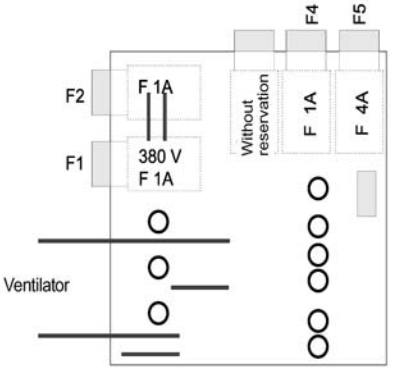

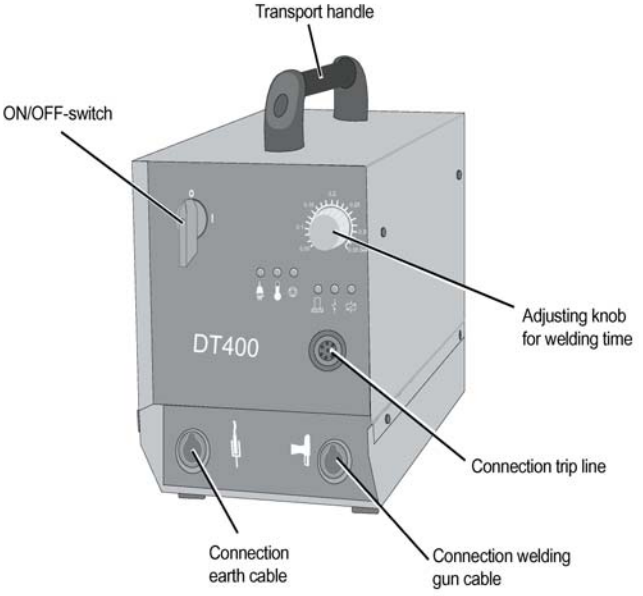

Meaning of LED Symbols

Symbol	LED	No.	lights up if
	operating lamp	1	the equipment is connected to the mains and switched on
	temperature lamp	2	the temperature of the transformer is too high (over 120)
	locking	3	the welding gun was not pulled off the stud after welding
	control lamp for lifting magnet	4	the trip line is properly connected and the lifting magnet is O.K.
	release lamp	5	the trigger switch on the welding gun is activated
	contact lamp	6	the stud has contact to the work piece

LED-Indicators

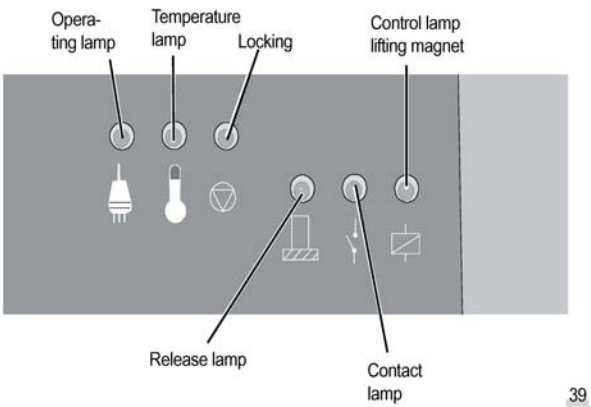

Welding gun

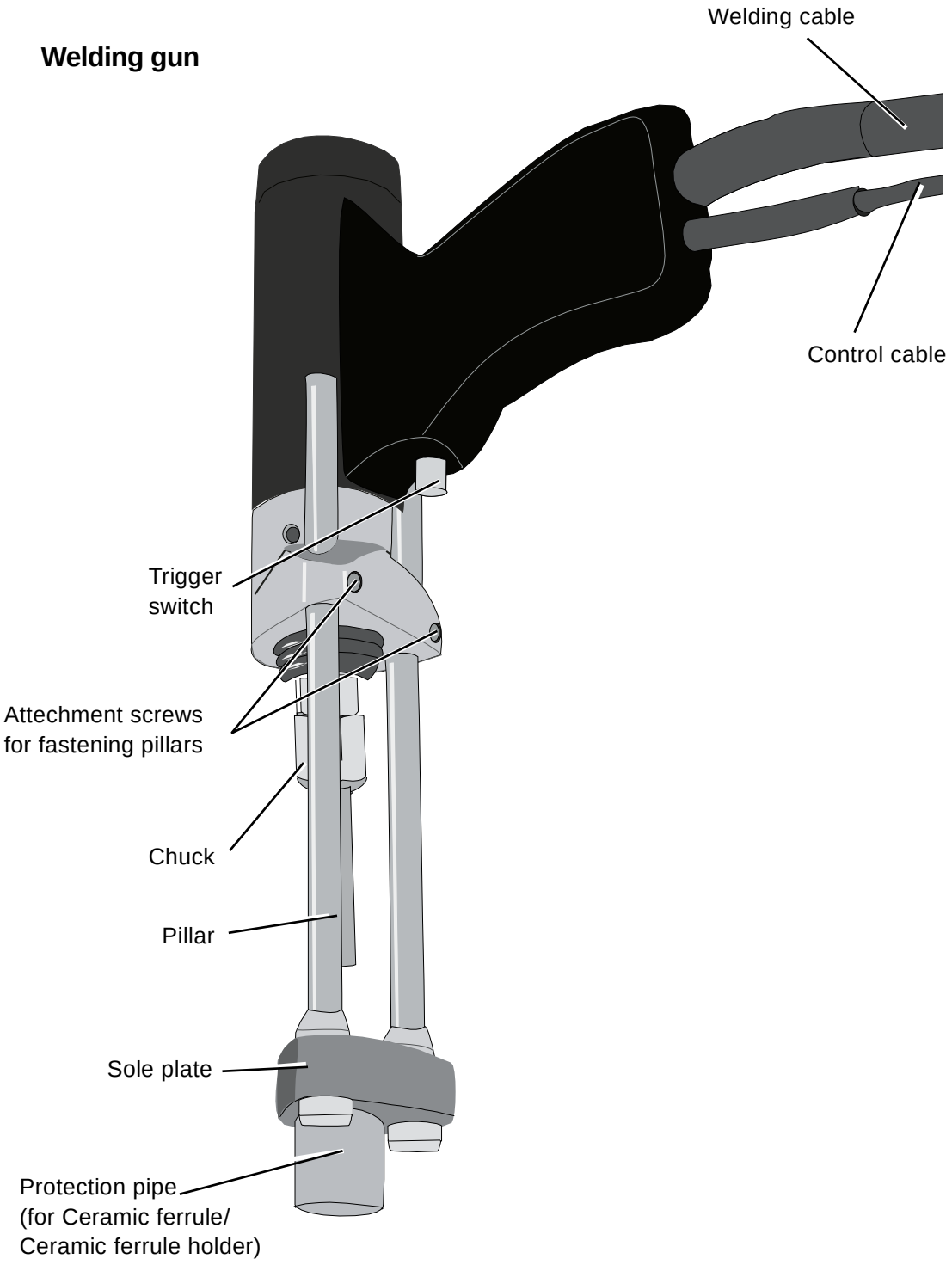
Welding cable
Control cable
Trigger switch
Attechment screws for fastening pillars
Chuck
Pillar
Sole plate
Protection pipe (for Ceramic ferrule/ Ceramic ferrule holder)

Ersatzteilliste

Typ: PHM-5

Artikel Nr. 80-35-1027

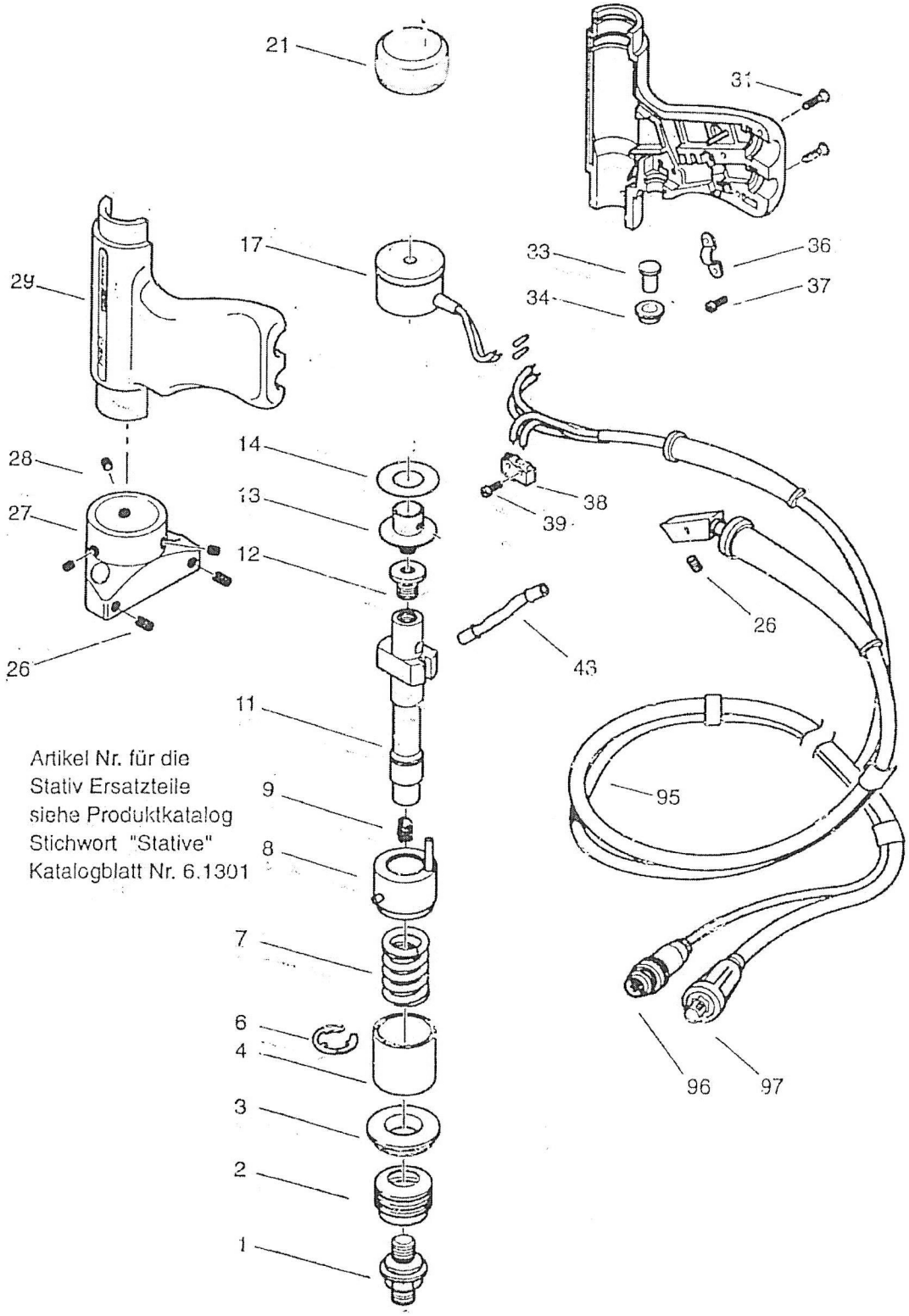

© mh 06.93 Änderungen vorbehalten

Baugruppenstückliste für: 80-35-1027 Schweißpistole PHM-5 16.02.1999

Artikelnummer	Artikelbezeichnung	Pos.	Bemerkung	Anzahl ME
80-35-1027	Schweißpistole PHM-5			1,000 Stk
+ 80-40-1112	Doppelnippel M10FA	1		1,000 Stk
+ 80-40-1097	Faltenbalg PHM1/3/4 PKM1/2 PIM	2		1,000 Stk
+ 80-40-1023	Isolierring	3		1,000 Stk
+ 80-40-1021	Führung ▪	4		1,000 Stk
+ 80-15-1023	Sicherungsscheibe RA12	6		1,000 Stk
+ 80-40-1038	Druckfeder d=1,5 Da=20,6 Lo=29,5	7		1,000 Stk
+ 80-40-1022	Verdrehschutz ▪	8		1,000 Stk
+ 80-40-1103	Kolben PHM3	11		1,000 Stk
+ 80-40-1104	Adapter 12	12		1,000 Stk
+ 80-40-1034	Magnetanker PHM1	13		1,000 Stk
+ 80-40-1035	MS-Scheibe	14		1,000 Stk
+ 80-40-1010	Distanzring PHM-5	16		1,000 Stk
+ 80-30-1010	Hubmagnet PHM	17		1,000 Stk
+ 80-40-1189	Abschlußkappe O	21		1,000 Stk
+ 80-40-1113	Fußring Stativ	27		1,000 Stk
+ 80-40-1602	Griffschale - neutral PKM, PHM	29		1,000 Stk
+ 80-40-1016	Stößel	33		1,000 Stk
+ 80-40-1017	Hülse	34		1,000 Stk
+ 80-10-1016	Kabelschelle 6mm	36		1,000 Stk
+ 80-50-1013	Mikroschalter	38		1,000 Stk
+ 80-72-1019	Verbindungskabel 25/83	43		1,000 Stk
+ 80-72-1075	Anschlußleitung 5M35Q35SK4SK	95		1,000 Stk
+ 80-15-9014	Schraubenset PHM3	100		1,000 Stk
	** Gesamtsumme Teile **			23,000

PHM-12

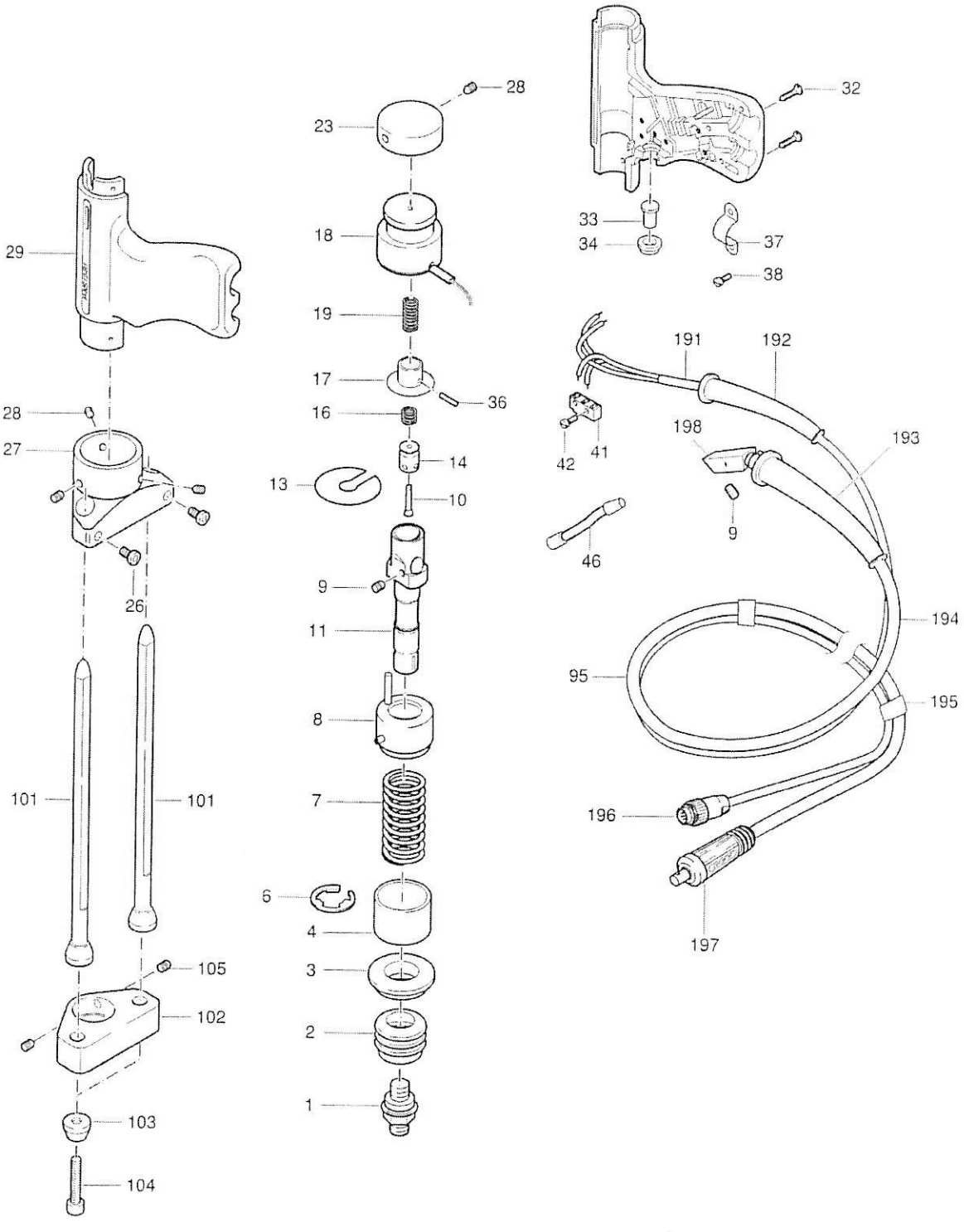
29
28
27
26
101
101
105
102
103
104
28
23
18
19
17
36
16
14
13
10
9
11
8
7
6
4
3
2
1
32
33
34
37
38
191
192
198
193
42
41
9
46
194
95
195
196
197

Baugruppenstückliste für: 90102X12L1 Schweißpistole PHM-12 Stückliste Kompl. 20.04.2001

Artikelnummer	Artikelbezeichnung	Pos.	Bemerkung	Anzahl ME
90102X12L1	Schweißpistole PHM-12 Stückliste Kompl.			1,000 Stk
+ 80-40-1112	Doppelnippel M10FA	1		1,000 Stk
+ 80-40-1097	Faltenbalg PHM1/3/4 PKM1/2 PIM	2		1,000 Stk
+ 80-40-1023	Isolierring	3		1,000 Stk
+ 80-40-1021	Führung ▪	4		1,000 Stk
+ 80-15-1023	Sicherungsscheibe RA12	6		1,000 Stk
+ 80-40-1115	Druckfeder d=1,4 Da=21,4 Lo=31	7		1,000 Stk
+ 80-40-1022	Verdrehschutz ▪	8		1,000 Stk
+ 80-40-1568	Klemmkonus PHM-10,12	10		1,000 Stk
+ 80-40-1455	Kolben PHM-12	11		1,000 Stk
+ 80-40-1159	Schlitzscheibe 15	13		1,000 Stk
+ 80-40-1489	Kugelträger PHM-10,12	14		1,000 Stk
+ 80-10-1240	Druckfeder d=0,4 Da=5,4 Lo=16,4	16		1,000 Stk
+ 80-40-1491	Magnetanker PHM-10,12	17		1,000 Stk
+ 80-30-1040	Hubmagnet PHM-10,12	18		1,000 Stk
+ 80-40-1416	Druckfeder d=0,8 Da=5,8 Lo=17,5	19		1,000 Stk
+ 80-40-1189	Abschlußkappe O	23		1,000 Stk
+ 80-15-1011	Gewindestift M5x8 DIN 913	26		3,000 Stk
+ 80-40-1113	Fußring Stativ	27		1,000 Stk
+ 80-15-1010	Gewindestift M5x4 DIN 916	28		5,000 Stk
+ 80-40-1602	Griffschale - neutral PKM, PHM	29		1,000 Stk
+ 80-15-1013	Linsensenk-Blechschraube B 3,5X16 DIN 7983	32		3,000 Stk
+ 80-40-1016	Stößel	33		1,000 Stk
+ 80-40-1017	Hülse	34		1,000 Stk
+ 80-15-1078	Spannhülse 2,0x14	36		1,000 Stk
+ 80-10-1015	Kabelschelle 4,5mm	37		1,000 Stk
+ 80-15-1076	Zylinderschraubem M2,5X6 /84	38		2,000 Stk
+ 80-50-1013	Mikroschalter	41		1,000 Stk
+ 80-15-1015	Schraube M2x10 DIN84	42		2,000 Stk
+ 80-72-1135	Verbindungskabel 25/82 PHM-10 / PHM-12	46		1,000 Stk
+ 80-72-1075	Anschlußleitung 5M35Q35SK4SK	95	4-Polig	1,000 Stk
+ 80-72-1018	Anschlußleitung 5M35Q35SK7SK	95	7-Polig	1,000 Stk
+ 80-42-0047	Label PHM-12	100		1,000 Stk
+ 80-40-1122	Säule 8/170	101		2,000 Stk
+ 80-40-1239	Fußplatte K22 /HGW Standart PHM-4,12	102		1,000 Stk
+ 80-40-1108	Abdeckscheibe Stativ D8	103		2,000 Stk
+ 80-15-1032	Schraube M5x25 DIN 912	104		2,000 Stk
+ 80-15-1024	Gewindestift M5X5 DIN 914	105		2,000 Stk
+ 80-72-1029	Steuerkabel	191		5,200 Stk

MA 9/025

+ 80-10-1011	Knickschutztülle ST	192		1,000 Stk
+ 80-30-1019	Knickschutztülle 35qmm	193		1,000 Stk
+ 80-50-1350	Schweißstromkabel 35qmm hochflexibel	194		5,000 Mtr
+ 80-10-1012	Kabelbinder	195		8,000 Stk
+ 80-50-1084	Stecker Kabel 4GS	196	4-Polig	1,000 Stk
+ 80-50-1010	Stecker Kabel 7GL	196	7-Polig	1,000 Stk
+ 80-50-1080	Stecker Kabel SK35	197		1,000 Stk
+ 80-35-1135	Kontaktklotz SL35 Set	198		1,000 Stk

After-sales-service

The DABOTEK-after-sales-service is there for you.
Office hours:
Mo - Fr 8.000 - 16.00

You can get in touch with the after-sales-service and
the order reception by telefon or fax:

Tel: +45 7930 7500
Fax:+45 7930 7505

Hotline: In emergency you can inform us round the clock -> page 2 of these operating instructions.

EC DECLARATION OF CONFORMITY

This certificate is only applicable to the original product condition of the equipment manufactured and marketed by us. Any change, alteration or modification effected on the equipment without our prior written approval will render this certificate null and void.



Type DT410

Serial number:

Welding gun type:

The following European standard specifications have been duly complied with:

* EC-machinery directive 91/44/EEC
* EC-low voltage directive 71/23/EEC, last revision per 93/68/EWG
* EC directive electromagnetic compatibility 89/336/EEC, version 92/31/EEC, last revision per 93//68/EEC

Applied national specifications or directives:
* UVV26, welding, cutting and related processes
* UVB 55

Bo Harlev
Dabotek
Birkedam 10C
DK 6000 Kolding

Best Regards

Bo Harlev
Managing Director

Date: 23 Okt. 2004

Blockschaltbild LBH-400

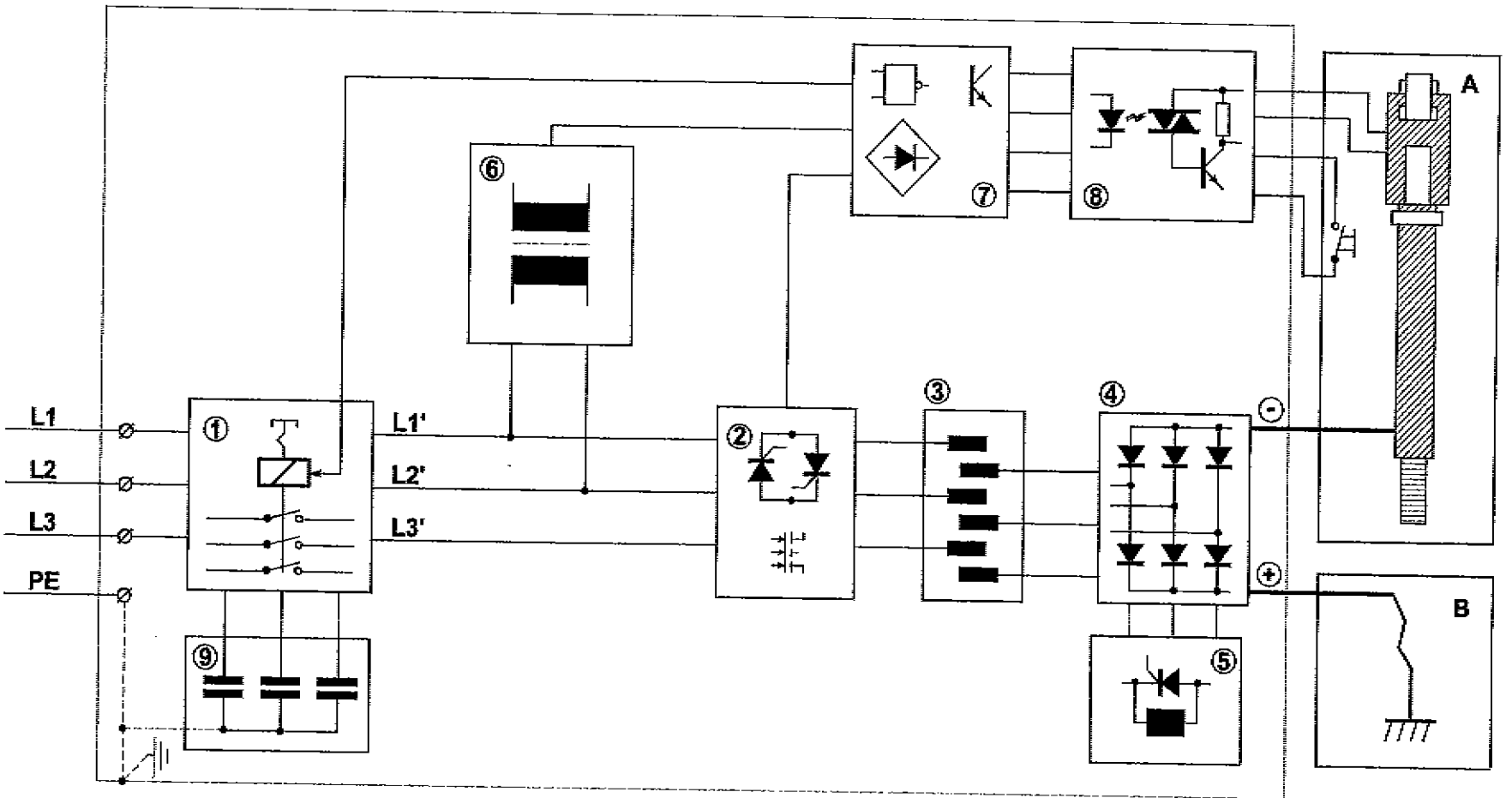

① Hauptschalter mit Haltespule 24V=
② Elektronische Lastrelais
③ Schweißtransformator
④ Gleichrichtersatz
⑤ Vorstromdrossel / Hauptthyristor
⑥ Steuertransformator
⑦ Steuerung (Platinen)
⑧ Schutzschaltung (Platine)
⑨ Burst-Entstörungssatz
Ⓐ Schweißpistole
Ⓑ Massekabel

Schaltplan LBH-400

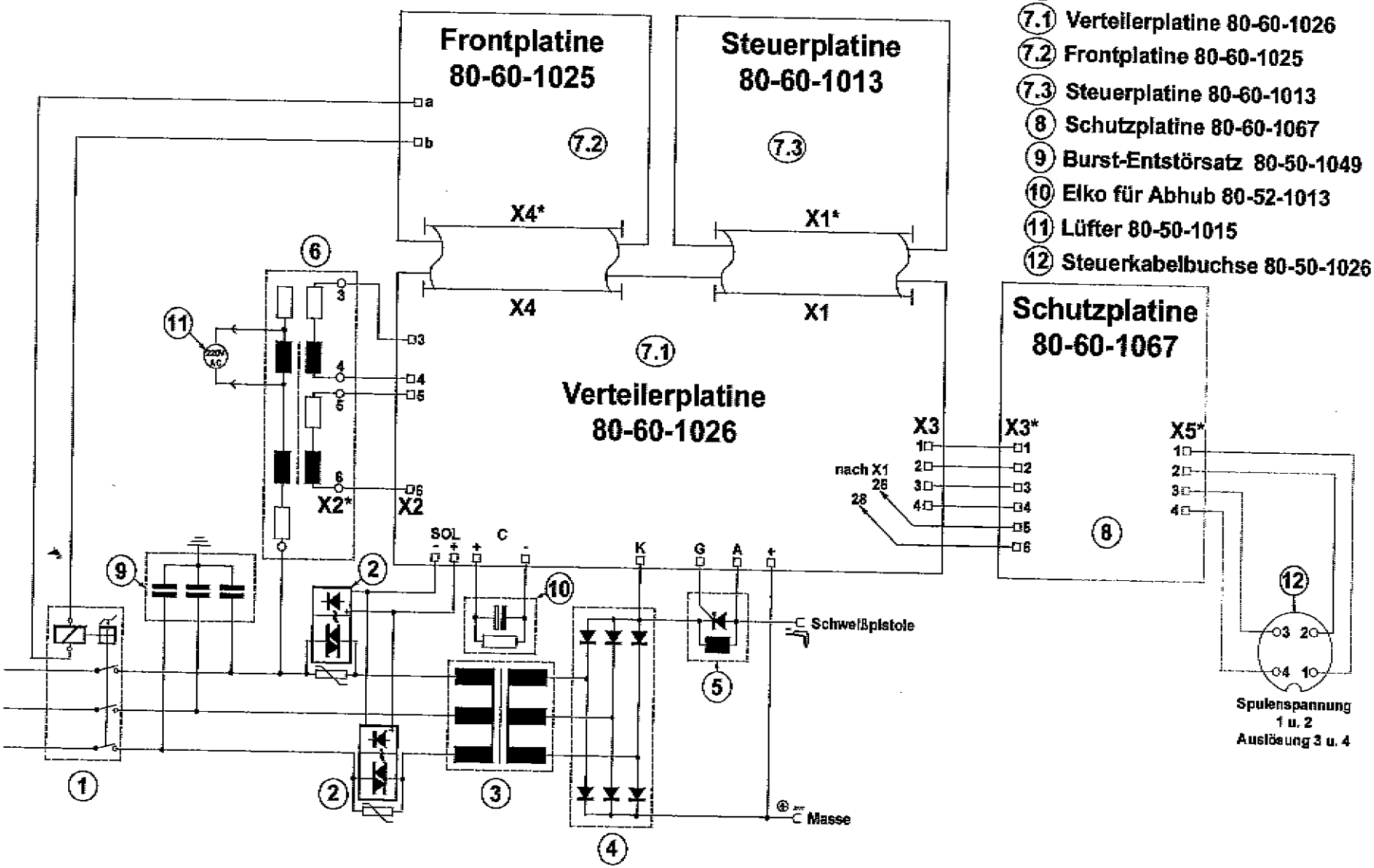

1. Hauptschalter 80-50-1104
2. Solidstaterelais 80-51-1014
3. Schweißtransformator 80-65-1019
4. Gleichrichter 3 Stck. 80-51-1054
5. Vorstromdrossel 80-65-1018
   Thyristor 80-51-1011
6. Steuertransformator 80-35-1048
7.1 Verteilerplatine 80-60-1026
7.2 Frontplatine 80-60-1025
7.3 Steuerplatine 80-60-1013
8. Schutzplatine 80-60-1067
9. Burst-Entstörsatz 80-50-1049
10. Elko für Abhub 80-52-1013
11. Lüfter 80-50-1015
12. Steuerkabelbuchse 80-50-1026





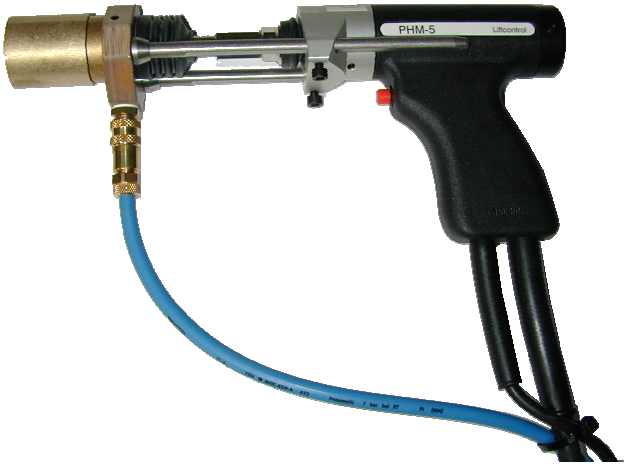

DT 410

Compact equipment for drawn arc studwelding in accordance with DVS 0902

FIELD OF APPLICATION
Handy, heavy-duty studwelding equipment for universal use. Sturdy and compact; ideal for assembly work, since it only weighs 25 kg. Studwelding elements in accordance with DIN 32500 and DIN 32501; specially designed metal components made of alloy and non-alloy steel. Special concept for insulation and heat resistant work.

THE WELDING PISTOL
Ample possibilities for fitting out the welding pistol. Depending on the assignment, a dampened or undampened pistol is used that features columns, baseplate and ceramic holder, or columns, baseplate equipped for short-time welding, or a fixed, non-adjustable tube.

PLEASE NOTE:
Simple, reliable and service-friendly - optimum safety during welding by means of "instant shift" to current-free circuit on the machine in the case of operating faults - using LED display; thermally controlled fan.

TECHNICAL DATA:

Field of application	:.drawn arc.
Current source	:.transformer with rectifier.
Welding current	:.400 A.
Welding time	:.20-200 mS, infinitely variable
.Welding range	:.diameter 3- 8 mm..
Material	:.steel, stainless steel, heat-resistant steel.
Welding speed	:.depends on use; up to 20 studs/min..
Power connection	:.380 V, 50/60 Hz, 25 A.
Dimensions	:.195 x 265 x 390 (W x H x L).
Weight	:.25 kg

DABOTEK

DABOTEK Trading ApS
Birkedam 10 C
DK-6000 Kolding;

TEL +45 75 505 666
FAX +45 75 504 795
sales@dabotek.dk
www.dabotek.dk